CASE MATERIAL: ALUMINUM 5052-H32
FINISH: CLEAR IRIDATED AS PER MIL-C-5541E
THE UNIT IS POTTED WITH SILICONE BASED
POTTING COMPOUND

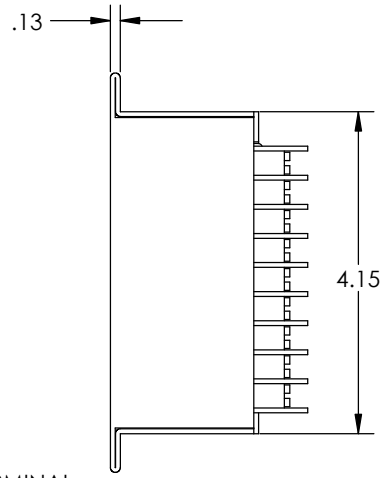

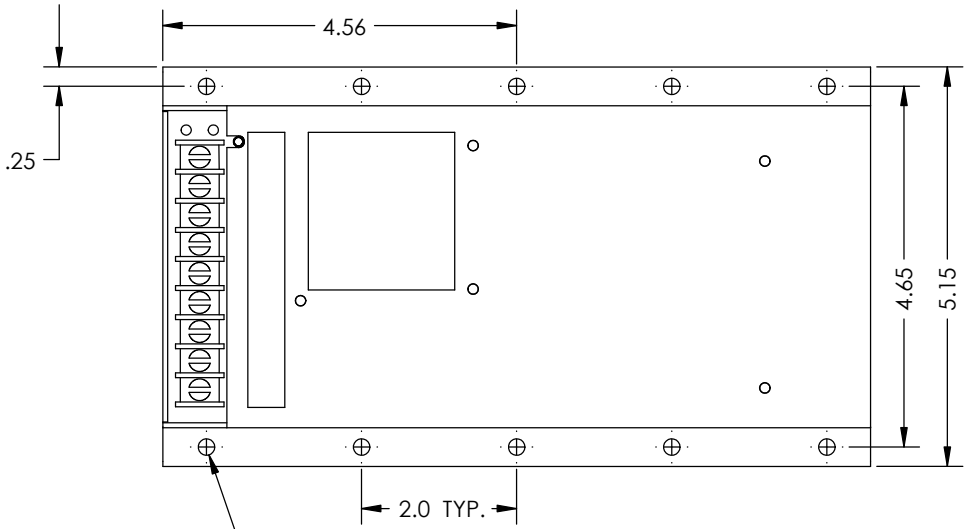

Ø.21 MOUNTING HOLE 10 PLCS.
OR 6-32 FASTENER INSERTED (OPTIONAL)

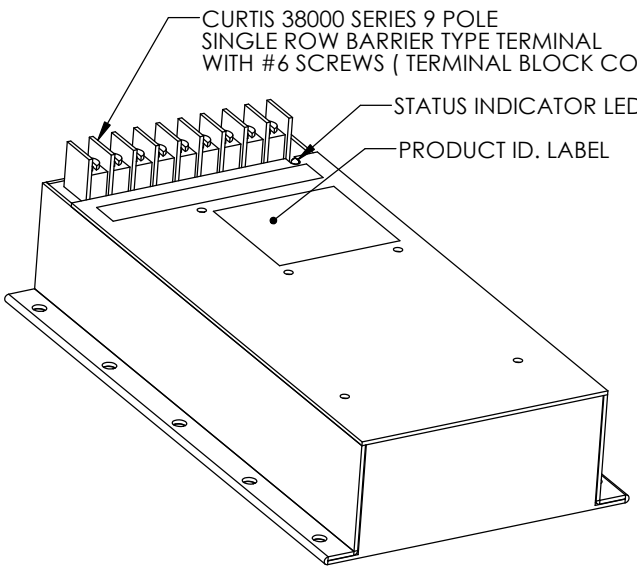

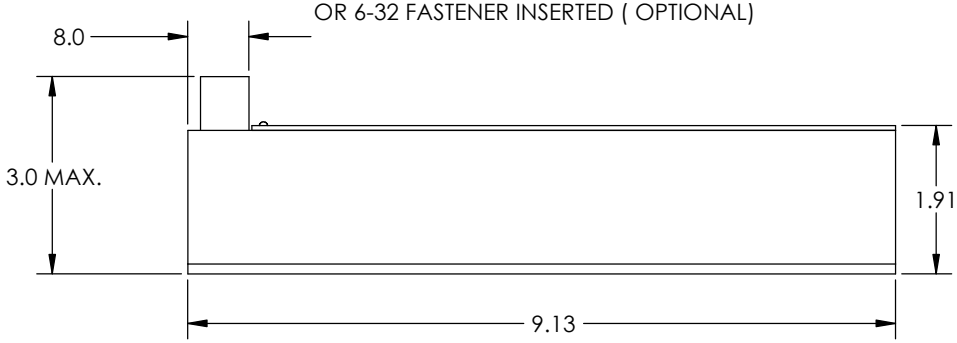

			EDGES & HOLES DEBURRED SURFACES FREE OF SCRATCHES	DIMENSIONS ARE IN INCHES TOLERANCES ON DECIMALS: XXX ± 0.008" XX ± 0.012" ANGLES: ± 2° FRACTIONS: ± 1/64" UNLESS OTHERWISE STATED	THIS DOCUMENT IS THE PROPERTY OF ABSOPULSE ELECTRONICS LTD. ITS CONTENTS ARE PROPRIETARY AND MAY NEITHER BE COPIED, REPRODUCED NOR ITS CONTENTS DISCLOSED TO OTHERS WITHOUT PRIOR WRITTEN AGREEMENT FROM ABSOPULSE ELECTRONICS LTD.	Title: OUTLINE DRAWING Part of: **P400 Package**				ABSOPULSE Date: APR.27.05.